PART NUMBER	REV	FIRST USED	SIZE	TYPE	A	B	C	D	E	F	G	R1
1490357-1	0	1490599-1	4	II	.626	.441	.734	.760	.597	.960	.039	.220
1490357-2	0	1490598-1	6	I	.629	.431	.674	.719	.627	.919	.039	.185
1490357-3	0	1490597-1	8	I	.626	.418	.630	.688	.627	.888	.020	.165

USED ON —

NOTES:

1. IDENTIFY PART PER 115-67-2 IN APPROXIMATE AREA SHOWN.
2. HOLES PER 106-4007.
3. BLANKED EDGE PERMISSIBLE THIS SIDE ONLY.
4. ALL RADII TO BE BLEND RADII UNLESS OTHERWISE SPECIFIED.

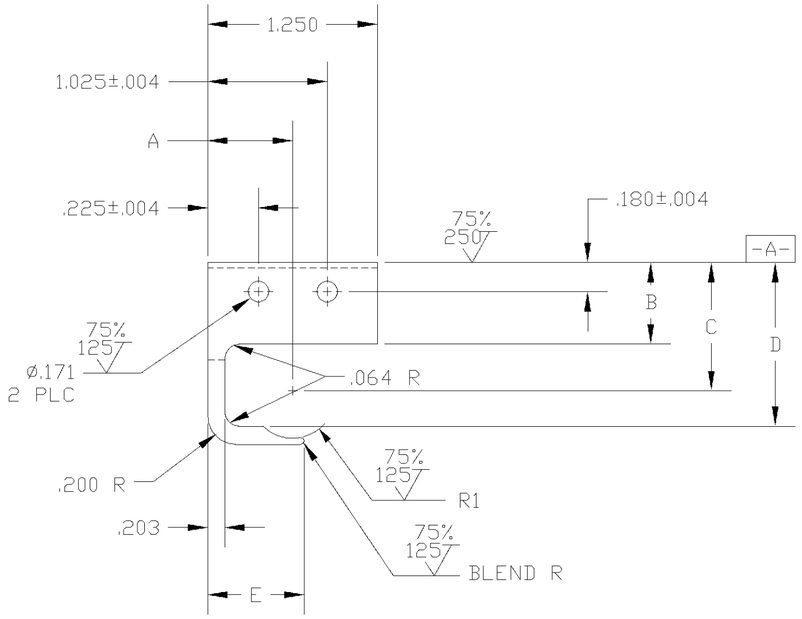

TYPE I

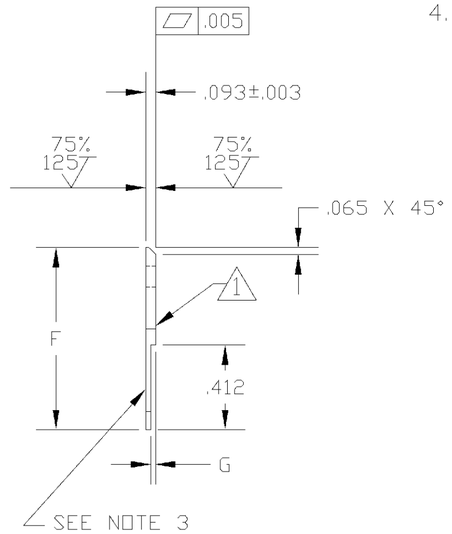

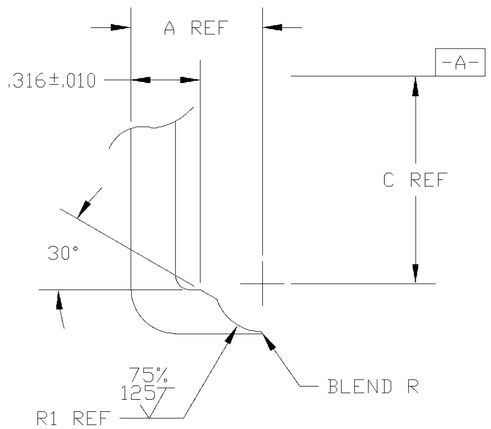

TYPE II
SCALE 2:1

P	LTR	REVISION RECORD	DATE	DWN	APVD
	—	—	—	—	—

FINISH 112-157-1 BLACKEN

DIMENSIONS: INCHES

TOLERANCES UNLESS OTHERWISE SPECIFIED:

0 PLC	± –
1 PLC	± –
2 PLC	± .02
3 PLC	± .005
4 PLC	± .0005

ANGLES ± 5°

SURFACE TEXTURE 300

DWN	EMP	26DEC00
CHK	C. GAVLAK	29NOV01
APVD	R. SCHAEFFER	03MAY02

MATERIAL: 100-30 CARBON STEEL

HEAT TREAT: 111-30-6 RC 45-50

tyco Electronics — Tyco Electronics Corporation, Harrisburg, PA 17105

NAME: LOCATOR

SCALE	SIZE	DRAWING NO	SHEET	REV
1:1	A2	1490357	1 OF 1	03

LOC A

DIST 40

AMP 3307-7 REV 31MAR2000

DWG NO 1490357

THIS DRAWING IS A CONTROLLED DOCUMENT.

THIS INFORMATION IS CONFIDENTIAL AND PROPRIETARY TO TYCO ELECTRONICS CORPORATION AND ITS WORLDWIDE SUBSIDIARIES AND AFFILIATES. IT MAY NOT BE DISCLOSED TO ANYONE, OTHER THAN TYCO ELECTRONICS PERSONNEL, WITHOUT WRITTEN AUTHORIZATION FROM TYCO ELECTRONICS CORPORATION, HARRISBURG, PENNSYLVANIA USA.