3-640599-2 ✔ ACTIVE

MTA 156

TE Internal #: 3-640599-2

2 Position, Receptacle, Connector Assembly, Insulation Displacement (IDC), Wire-to-Board, Tin (Sn), UL 94V-2, 3.96 mm [.156 in] Centerline, MTA 156

View on TE.com >

Connectors > Rectangular Connectors > Standard Rectangular Connectors

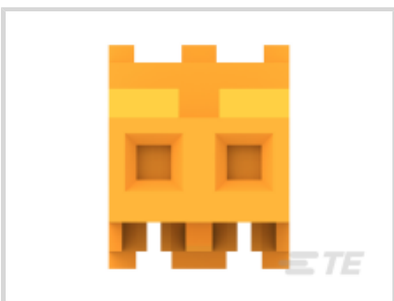

Connector Product Type: **Connector Assembly**

Mating Alignment: **Without**

Connector & Housing Type: **Receptacle**

Mating Retention Type: **Locking Ramp**

Connector System: **Wire-to-Board**

Features

Product Type Features

Compatible With Discrete Wire Type	Stranded
Connector Product Type	Connector Assembly
Connector & Housing Type	Receptacle
Connector System	Wire-to-Board
Sealable	No
Connector & Contact Terminates To	Wire & Cable

Configuration Features

Number of Positions	2
Number of Rows	1
Number of Power Positions	2

Electrical Characteristics

Operating Voltage	600 VAC

Body Features

Primary Product Color	Orange

Cable Exit Angle	90°

Contact Features

Contact Underplating Material	Nickel
Contact Underplating Material Thickness	30 µm[.762 µin]
Contact Layout	Inline
Contact Base Material	Copper Alloy
Wire Contact Termination Area Plating Thickness	2.03 – 5.08 µm[80 – 200 µin]
Contact Mating Area Plating Material Finish	Matte
Contact Mating Area Plating Material	Tin (Sn)
Contact Retention Within Housing	With
Contact Current Rating (Max)	7 A
Contact Type	Receptacle
Wire Contact Termination Area Plating Material	Tin
Contact Mating Area Plating Material Thickness	2.03 – 5.08 µm[80 – 200 µin]

Termination Features

Termination Method to Wire & Cable	Insulation Displacement (IDC)

Mechanical Attachment

Strain Relief	With
Panel Mount Feature	Without
Contact Retention Type Within Housing	Locking Lance
Mating Alignment	Without
Mating Retention Type	Locking Ramp
Mating Retention	With
Connector Mounting Type	Cable Mount (Free-Hanging)

Housing Features

Wire & Cable IDC Installation Type	Feed Through
Centerline (Pitch)	3.96 mm[.156 in]
Housing Material	Nylon

Dimensions

Compatible Insulation Diameter Range	2.41 mm[.095 in]
Connector Height	9.78 mm[.385 in]
Connector Length	7.92 mm[.312 in]

Wire Size	.823 mm²

Usage Conditions

Operating Temperature Range	-55 – 105 °C[-67 – 221 °F]

Operation/Application

Circuit Application	Power

Industry Standards

Compatible With Agency/Standards Products	CSA, UL
UL Rating	Recognized
Compatible With Approved Standards Products	UL E28476
CSA Rating	Certified, LR 7189
UL Flammability Rating	UL 94V-2
Glow Wire Rating	Standard Part - Not Glow Wire

Packaging Features

Packaging Quantity	500
Packaging Method	Bag & Box

Product Compliance

For compliance documentation, visit the product page on TE.com>

EU RoHS Directive 2011/65/EU	Compliant
EU ELV Directive 2000/53/EC	Compliant
China RoHS 2 Directive MIIT Order No 32, 2016	No Restricted Materials Above Threshold
EU REACH Regulation (EC) No. 1907/2006	Current ECHA Candidate List: JUNE 2025 (250) Candidate List Declared Against: JUNE 2025 (250) Does not contain REACH SVHC
Halogen Content	Low Halogen - Br, Cl, F < 900 ppm per homogenous material. Also BFR/CFR/PVC Free
Solder Process Capability	Not applicable for solder process capability

Product Compliance Disclaimer

This information is provided based on reasonable inquiry of our suppliers and represents our current actual knowledge based on the information they provided. This information is subject to change. The part numbers that TE has identified as EU RoHS compliant have a maximum concentration of 0.1% by weight in homogenous materials for lead, hexavalent chromium, mercury, PBB, PBDE, DBP, BBP, DEHP, DIBP, and 0.01% for cadmium, or qualify for an exemption to these limits as defined in the Annexes of Directive 2011/65/EU (RoHS2). Finished electrical and electronic equipment products will be CE marked as required by Directive 2011/65/EU. Components may not be CE marked. Additionally, the part

numbers that TE has identified as EU ELV compliant have a maximum concentration of 0.1% by weight in homogenous materials for lead, hexavalent chromium, and mercury, and 0.01% for cadmium, or qualify for an exemption to these limits as defined in the Annexes of Directive 2000/53/EC (ELV). Regarding the REACH Regulation, the information TE provides on SVHC in articles for this part number is based on the latest European Chemicals Agency (ECHA) 'Guidance on requirements for substances in articles' posted at this URL: https://echa.europa.eu/guidance-documents/guidance-on-reach

Compatible Parts

TE Part # 2-647127-2
02P MTA156 SHRD HDR ASSY LF

TE Part # 3-644617-2
02P MTA156 HDR ASY PO RA FB LF

TE Part # 643067-2
02P MTA156 MOLDED COVER

TE Part # 640631-3
MTA .156 CONTACT BRSNBR

TE Part # 58074-1
MTA 50/100/156 MANUAL TOOL FRAME

TE Part # 644751-2
02P MTA156 HDR ASSY R/A

TE Part # 3-641524-2
02P MTA156 PSTD CONN ASSY LF

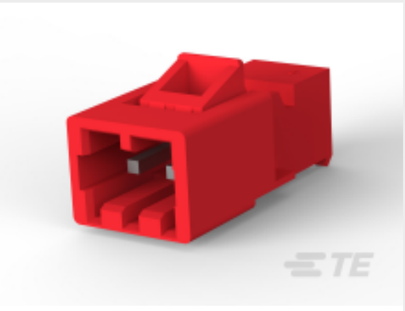

TE Part # 3-641437-2
02P MTA156 PSTD CONN ASSY RED

TE Part # 640389-2
02P MTA156 HDR ASSY SQ R/A F/L

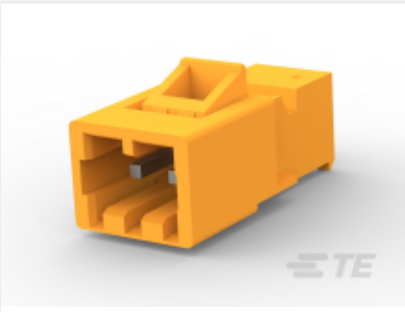

TE Part # 3-641435-2
02P MTA156 CONN ASSY ORNG

TE Part # 640643-2
02P MTA156 COVER F/T

TE Part # 644749-2
02P MTA156 HDR ASSY STR SQ SN

TE Part # 2-647123-2
02P MTA156 SHRD HDR ASSY SQ SN

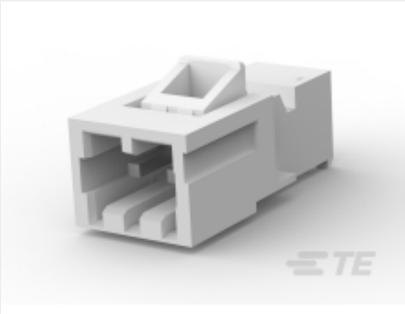

TE Part # 3-641438-2
02P MTA156 PSTD CONN ASSY WHT

TE Part # 3-644611-2
02P MTA156 HDR POL WO PEGS LF

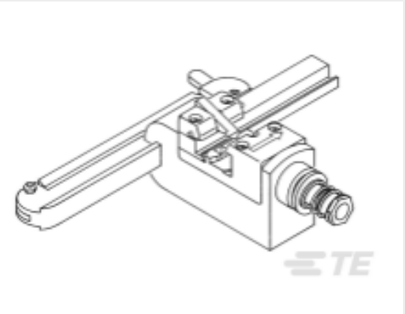

TE Part # 58443-1
MTA 156 CRIMP HEAD PRODUCTION FEED THRU

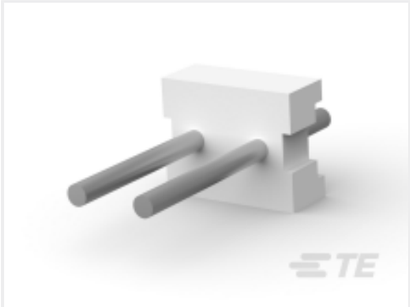

TE Part # 640384-2
02P MTA156 HDR ASSY STR RND SN

TE Part # 640551-2
02P MTA156 COVER

TE Part # 640385-2
02P MTA156 HDR ASSY SQ R/A

TE Part # 640445-2
02P MTA156 HDR ASSY FL/STR SN

Also in the Series | MTA 156

Connector Caps & Covers(89)

Connector Contacts(4)

Connector Hardware(2)

Insertion & Extraction Tools(1)

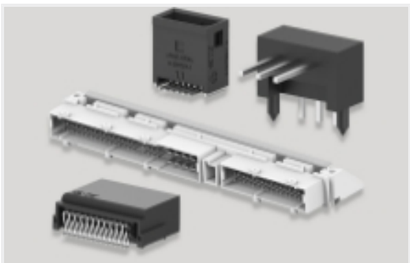

PCB Headers & Receptacles(677)

Power Contacts(3)

Rectangular Power Connectors(1178)

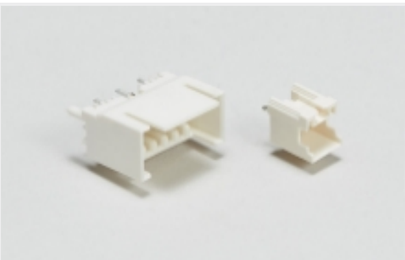

Wire-to-Board Headers & Receptacles (677)

Customers Also Bought

TE Part #1SNA116302R2300
MB10/22.SF

TE Part #35115
SPLICE,N CE 22-14

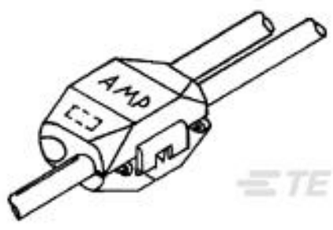

TE Part #53440-1
ELECTRO-TAP, 18-14 AWG RUN&TAP

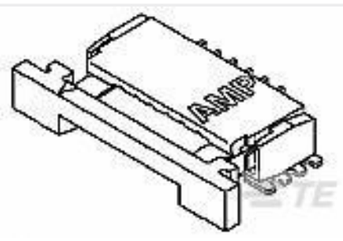

TE Part #84952-9
1MM FPC HORZ.BTTM CONT.ASS.9P

TE Part #293014-1
7 POS. FASTIN FASTON TAB HSG

TE Part #3-640426-2
02P MTA156 CONN ASSY 18AWG ORA

TE Part #643232-1
05P UMNL HDR ASSY R/A 94VO

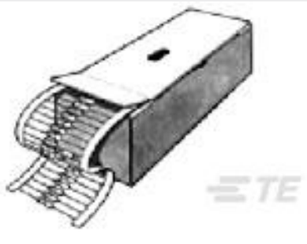

TE Part #2176079-9
EP 3W 220R 5%

TE Part #2309408-2
DDR4 SODIMM 260P 4.0H RVS

TE Part #6609987-9
15SRB1=F8219H

Documents

Product Drawings

02P MTA156 CONN ASSY 18AWG ORA

English

CAD Files

3D PDF

3D

Customer View Model

ENG_CVM_CVM_3-640599-2_N.2d_dxf.zip

English

Customer View Model

ENG_CVM_CVM_3-640599-2_N.3d_igs.zip

English

Customer View Model

ENG_CVM_CVM_3-640599-2_N.3d_stp.zip

English

By downloading the CAD file I accept and agree to the Terms and Conditions of use.

Product Specifications

Application Specification

English

Application Specification

Japanese

Application Specification

English

MTA 156 Ribbon Cable Connector Assemblies (English And Spanish)

English

MTA 156 Ribbon Cable Connector Assemblies (English And Spanish)

Japanese

Agency Approvals

UL

English