DASH NO.	M CODE	MADE FROM

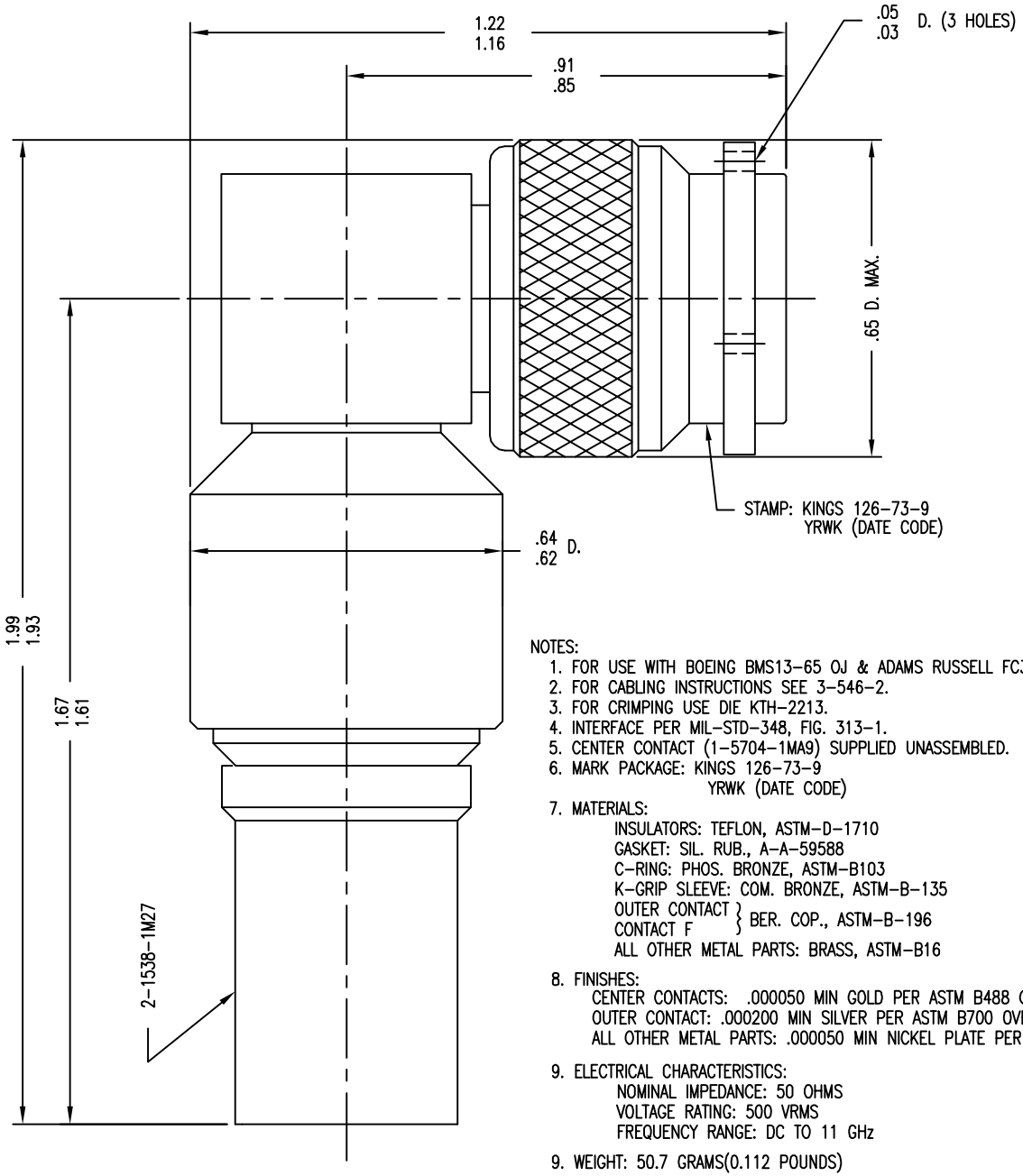

NOTES:

1. FOR USE WITH BOEING BMS13-65 OJ & ADAMS RUSSELL FC38Z CABLE.
2. FOR CABLING INSTRUCTIONS SEE 3-546-2.
3. FOR CRIMPING USE DIE KTH-2213.
4. INTERFACE PER MIL-STD-348, FIG. 313-1.
5. CENTER CONTACT (1-5704-1MA9) SUPPLIED UNASSEMBLED.
6. MARK PACKAGE: KINGS 126-73-9
   YRWK (DATE CODE)
7. MATERIALS:
   INSULATORS: TEFLON, ASTM-D-1710
   GASKET: SIL. RUB., A-A-59588
   C-RING: PHOS. BRONZE, ASTM-B103
   K-GRIP SLEEVE: COM. BRONZE, ASTM-B-135
   OUTER CONTACT } BER. COP., ASTM-B-196
   CONTACT F }
   ALL OTHER METAL PARTS: BRASS, ASTM-B16
8. FINISHES:
   CENTER CONTACTS: .000050 MIN GOLD PER ASTM B488 OVER .000050 MIN NICKEL PER AMS-QQ-N-290(RoHS)
   OUTER CONTACT: .000200 MIN SILVER PER ASTM B700 OVER .000020 MIN. COPPER PER ASTM B734(RoHS)
   ALL OTHER METAL PARTS: .000050 MIN NICKEL PLATE PER AMS-QQ-N-290 OVER .000050 MIN COPPER PER ASTM B734(RoHS)
9. ELECTRICAL CHARACTERISTICS:
   NOMINAL IMPEDANCE: 50 OHMS
   VOLTAGE RATING: 500 VRMS
   FREQUENCY RANGE: DC TO 11 GHz
9. WEIGHT: 50.7 GRAMS(0.112 POUNDS)

126-73-9

REVISIONS

ISSUE	CHANGES
0	ER 35661 KH 06/29/94
1	CN 38251 C BDH 03/14/01
C	ER 33785 COL 07/14/11

SALES DRAWING

THIS DRAWING, THE DESIGNS AND IDEAS EMBODIED IN THE DEVICE TO WHICH IT RELATES, AND THE METHOD OF PRODUCING THE DEVICE, ARE THE PROPERTY OF WINCHESTER ELECTRONICS CORPORATION AND SHALL NOT BE EMPLOYED, COPIED, OR DISCLOSED TO ANYONE, IN ANY MANNER WITHOUT THE CONSENT OF WINCHESTER ELECTRONICS CORPORATION.

SCALE 4:1

APPROX SURFACE AREA

USED ON

CAGE CODE:91836

PLUG, ANGLE, TNC

DRAWN	KH	DATE	06/29/94
DESIGN	JT	DATE	06/30/94
APPR.		DATE	

KINGS by WINCHESTER ELECTRONICS

Winchester Electronics
62 Barnes Industrial Road North
Wallingford, CT 06492

SIZE A

126-73-9