MICRO SWITCH
a Honeywell Division
FED. MFG. CODE 91929

SWITCH–ENCLOSED

CATALOG LISTING
622EN230

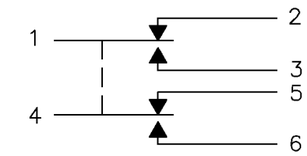

CIRCUIT DIAGRAM

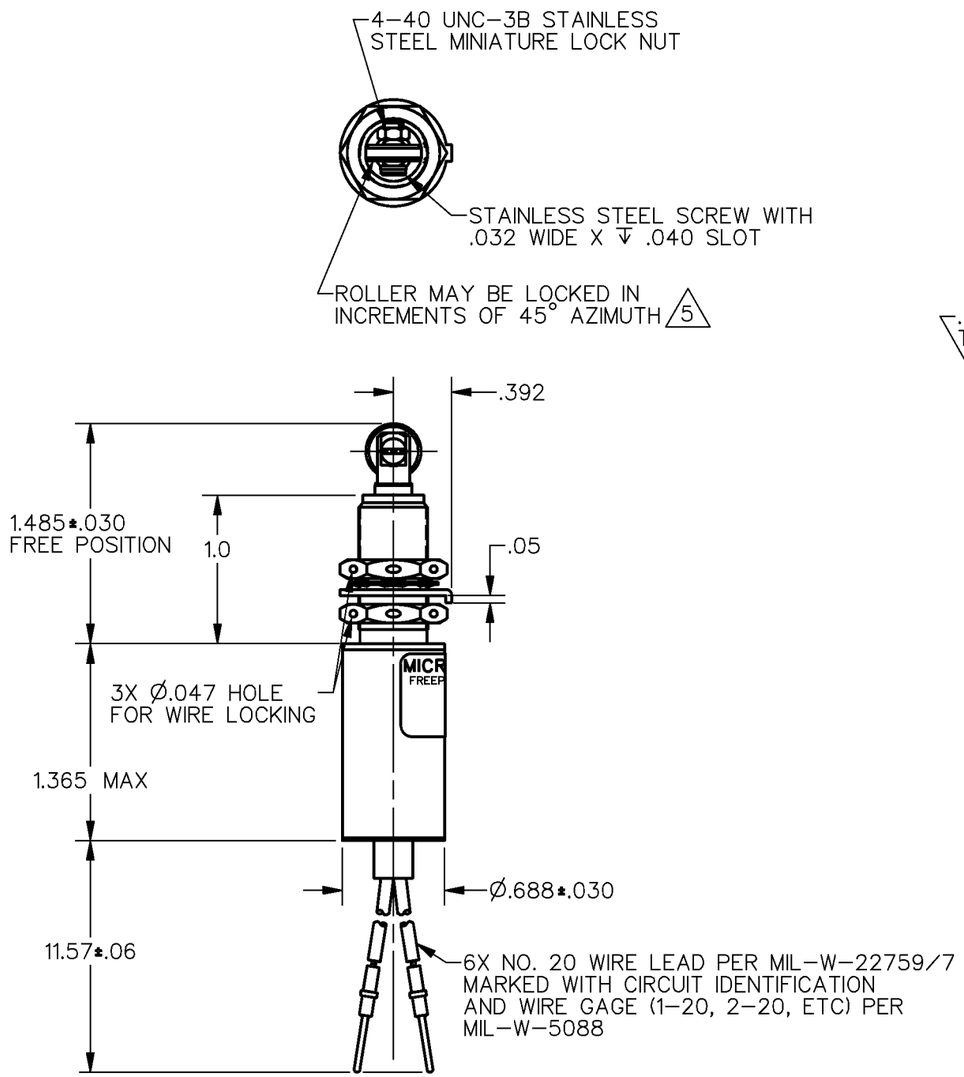

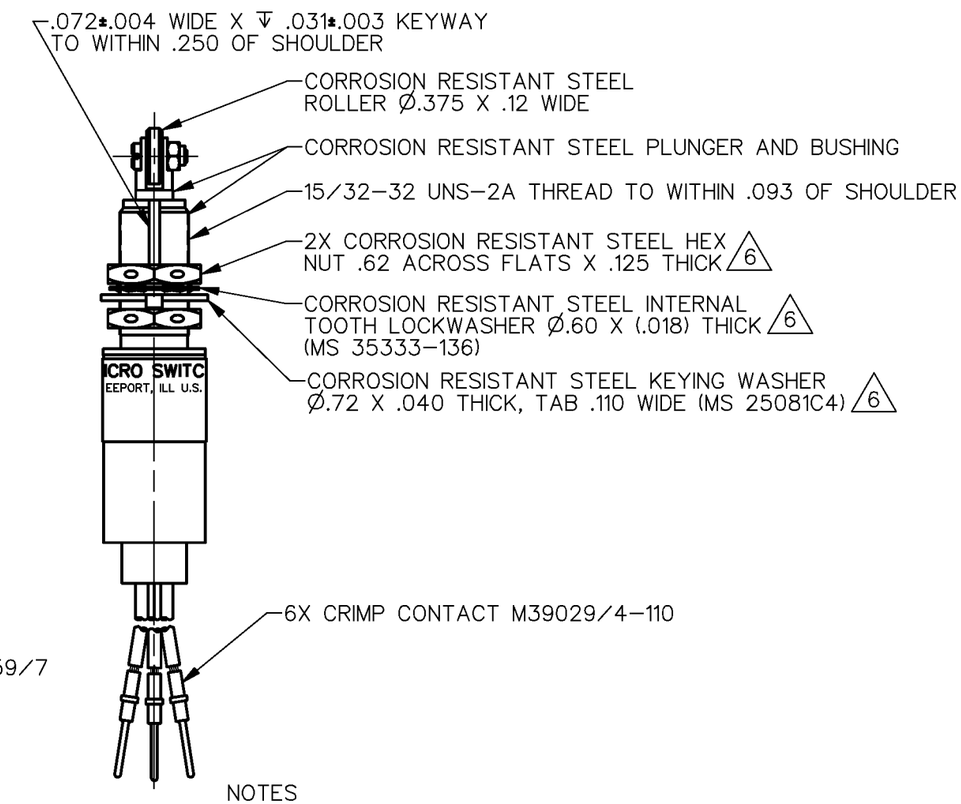

NOTES
1 – CORROSION RESISTANT STEEL ENCLOSURE
2 – SWITCH SEALED PER MIL–S–8805 SYMBOL 4
3 – COINCIDENCE OF OPERATING AND RELEASING POINTS: .010 OF PLUNGER TRAVEL
4 – CIRCUIT DIAGRAM, AND CATALOG LISTING SHOWN ON NAMEPLATE
5 – TO ADJUST ROLLER DIRECTION, REMOVE LOCK NUT, SCREW, AND ROLLER. DEPRESS PLUNGER UNTIL IT CAN BE ROTATED TO DESIRED POSITION. RETURN PLUNGER TO FREE POSITION AND REASSEMBLE ROLLER
6 – HARDWARE MAY BE PACKAGED UNASSEMBLED PER MIL–S–8805
7 – BIFURCATED GOLD CONTACT BASIC SWITCHES

THIS DRAWING COVERS A PROPRIETARY ITEM AND IS THE PROPERTY OF MICRO SWITCH. A DIVISION OF HONEYWELL. THIS DRAWING IS NOT TO BE COPIED OR USED WITHOUT THE APPROVAL OF MICRO SWITCH

THIRD ANGLE PROJECTION

SCALE FULL

DO NOT SCALE PRINT

CHARACTERISTICS

OPERATING FORCE	6 –12 LB
FULL OVERTRAVEL FORCE	30 LB MAX
RELEASE FORCE	4 LB MIN
PRETRAVEL	.040 MAX
DIFFERENTIAL TRAVEL	.020 MAX
OVERTRAVEL	.125 MIN

ELECTRICAL DATA

CONTACT ARRANGEMENT
2X S P D T 7

LOAD	28 VDC	
	SEA LEVEL	50,000 FT.
RES	1	1
IND	0.5	0.5

UNLESS OTHERWISE SPECIFIED TOLERANCES ARE

ONE PLACE	(.0)	±.030
TWO PLACE	(.00)	±.015
THREE PLACE	(.000)	±.005
ANGLES		±

WEIGHT

ANSI Y14.5M–1982 APPLIES

CATALOG LISTING 622EN230
PAGE 1 OF 1
RELEASE NO. PR–23406
REPLACES
ISSUE 2 M
CHECK
REVISIONS
A PR–REL PR23406 LJK 11 MAY 98
CHECK
CHECK
CHECK
DRAWN L J K 11 MAY 98
DDM/CAD