MICRO SWITCH
FREEPORT, ILLINOIS, U.S.A.
A DIVISION OF HONEYWELL

FED. MFG. CODE 91929

GUARD RING

CATALOG LISTING
2K SERIES
CHART I

THIS DRAWING COVERS A PROPRIETARY ITEM AND IS THE PROPERTY OF MICRO SWITCH, A DIVISION OF MINNEAPOLIS-HONEYWELL REGULATOR CO. THIS DRAWING IS NOT TO BE COPIED OR USED WITHOUT THE APPROVAL OF MICRO SWITCH.

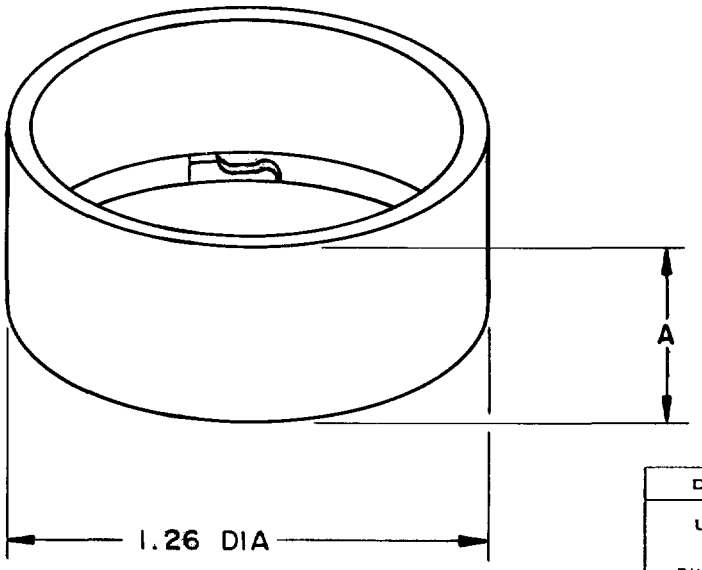

PLASTIC

DO NOT SCALE PRINT

UNLESS OTHERWISE SPECIFIED
DIMENSIONS ARE IN INCHES
TOLERANCES ARE:

ONE PLACE	(.0)	±.030
TWO PLACE	(.00)	±.015
THREE PLACE	(.000)	±.005
ANGLES		±

CATALOG LISTING	RELEASE STATUS	A(REF)	COLOR	CATALOG LISTING	RELEASE STATUS	A REF	COLOR
Ⓑ	SR 9900	.315	RED				
Ⓑ	SR 9900	.315	WHITE				
Ⓒ	SR 9900	.315	GRAY				
2K4	SR 9900	.315	BLACK				
Ⓑ	SR 9900	.315	BLUE				
2K6	SR 9900	.475	RED				
Ⓐ	SR 9900	.475	WHITE				
Ⓑ	SR 9900	.475	GRAY				
2K9	SR 9900	.475	BLACK				
2K10	SR 9900	.475	BLUE				

CATALOG LISTING
2K SERIES CHART 1
PAGE 1 OF 1

M

DRAWING NUMBER

RELEASE NO. SR 9900

REPLACES

ISSUE 4

REVISIONS

A	C093124	GJW 14 SEP 98	CHECK
B	CO-95810	CSL 31 JAN 00	17 APR 63
C	201190	CSL 6 SEP 00	CSK
			CHECK
			17 APR 63
			DAW
			CHECK
			63
			APR
			15
			DRAWN
			LMH

RASTER

FO-50376-005