CUC-IA3G-J1ST-AB/R4T-P - Filtered RJ45 PCB connectors

1664112

https://www.phoenixcontact.com/nl/products/1664112

Please be informed that the data shown in this PDF document is generated from our online catalog. Please find the complete data in the user documentation. Our general terms of use for downloads are valid.

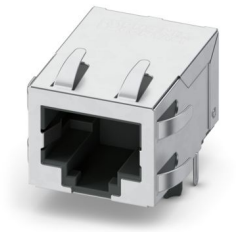

Filtered RJ45 PCB connectors, 1x1 single-port, connection direction of the connector to the PCB: 90 °, Tab down, Shielded, shield springs, number of positions: 8, 1 Gbps, THT, THD, Wave, IP20

Your advantages

- Simplified Ethernet design process thanks to integrated filtering
- Reduced PCB complexity and reduced EMC risks
- High mechanical stability when connecting the female connector to the PCB using through-hole technology (THT)
- Tray packing
- Space-saving due to the compact design
- Outstanding EMI performance
- Enables space-saving PCB design while simultaneously reducing the BOM thanks to integrated filters and transformers
- Ideal for demanding industrial applications due to the high shock and vibration resistance as well as the extended temperature range

Commercial data

Item number	1664112
Packing unit	50 pc
Minimum order quantity	150 pc
Sales key	ABNAFA
Product key	ABNAFA
GTIN	4067923203488
Weight per piece (including packing)	9 g
Weight per piece (excluding packing)	6,3 g
Customs tariff number	85366930
Country of origin	Information on the country of origin is provided with the delivery.

CUC-IA3G-J1ST-AB/R4T-P - Filtered RJ45 PCB connectors

1664112

https://www.phoenixcontact.com/nl/products/1664112

Technical data

Product properties

Slots	1x1 single-port
Orientation to PCB	90.00 °
Type	THD
Number of positions	8 (8P8C)
Type of locking	Snap-in locking, Tab down
Shielding	Shielded, shield springs
Processing notes	Wave
Transmission speed	1 Gbps (1000BASE-T)

Electrical properties

Pollution degree	2 (IEC 60664-1)
Overvoltage category	I (IEC 60664-1)
Rated surge voltage	1.5 kV (IEC 60664-1)
Rated current	0.5 A
Insulation resistance	> 500 MΩ (IEC 60603-7)
Test voltage (Contact/shield)	1.5 kV DC (IEC 60603-7)

Dimensions

Length	21.35 mm
Width	15.9 mm
Height	17.13 mm
Installed height	13.63 mm
Data pin length	3.50 mm

Material specifications

Material Contact carrier	LCP
Flame resistance	UL 94 V0
Halogen-free	yes
Material Housing	Copper alloy
Material Housing coating	Ni (0.762 µm min / 30 µ" min)
Material Housing pin coating (top layer/selective)	Sn (3,048 µm min / 120 µ" min)
Material Contact	Phosphor bronze
Material Solder contact coating (intermediate layer)	Ni (1,016 µm min / 40 µ" min)
Material Solder contact coating (top layer/selective)	Sn (3,048 µm min / 120 µ" min)
Material Plug contact coating (top layer/selective)	Au (0.762 µm/30 µ")
Material Plug contact coating (intermediate layer)	Ni (1,270 µm min / 50 µ" min)

Mechanical properties

Mechanical data

Insertion/withdrawal cycles	> 750 (IEC 60603-7)

Insertion force	< 20 N (IEC 60603-7)
Withdrawal force	< 20 N (IEC 60603-7)

Environmental and real-life conditions

Ambient conditions

Ambient temperature (operation)	-40 °C ... 85 °C
Ambient temperature (storage/transport)	-40 °C ... 85 °C
Degree of protection (plugged in)	IP20 (IEC 60603-7)

Test specification for vibration - sine (IEC 60068-2-6)

Acceleration	100 m/s²
Frequency	10 ... 500 Hz
Amplitude	0.35 mm
Cycles	10 cycles per axis, 20 sweeps
Sweep speed	1 octave/min

Test specification Shock (IEC 60068-2-27)

Pulse shape	Half-sine
Acceleration	300 m/s²

Mounting

Processing notes

Mounting type	THT

Drawings

Diagram

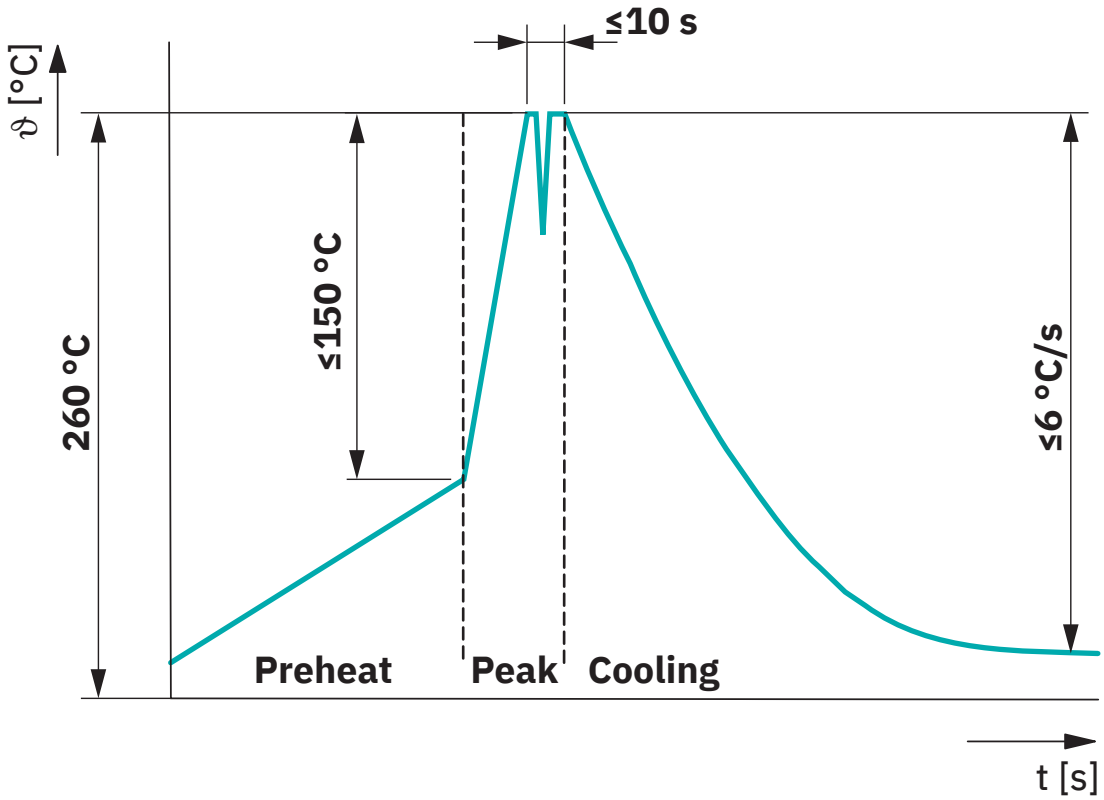

Classification wave soldering profile

Circuit diagram

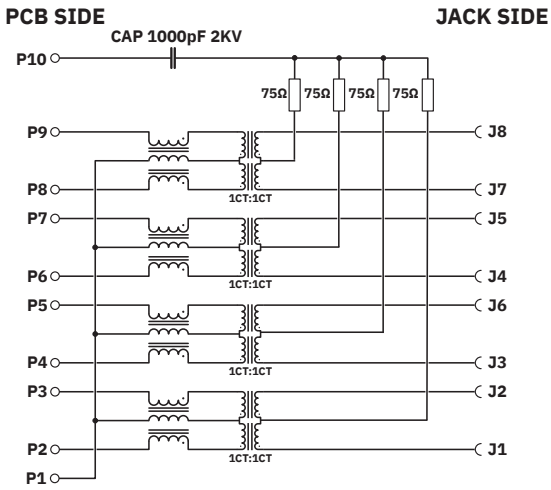

ELECTRONICAL SPECIFICATIONS

1. ACCORDING TO IEEE 802.3

2. TURN RATIO @100KHz:	(P2~P3):(J1~J2) = 1:1±5% (P4~P5):(J3~J6) = 1:1±5% (P6~P7):(J4~J5) = 1:1±5% (P8~P9):(J7~J8) = 1:1±5%	
3. PRIMARY INDUCTANCE:	350µH MIN @100KHz 0,1V 8mA DC BIAS	
4. DC RESISTANCE:	1,2 OHMS MAX	
5. INSERTION LOSS:	1-125MHz	-1,0dB TYP
6. RETURN LOSS:	1-40MHz 40-60MHz 60-80MHz 80-100MHz	-16dB MIN -12dB MIN -10dB MIN -8dB MIN
7. CROSS TALK:	1-100MHz	-30dB MIN
8. COMMON TO COMMON MODE ATTENUATION:	1-100MHz	-30dB MIN

9. ISOLATION: PHY SIDE TO LINE SIDE: 2250VDC

Circuit diagram

CUC-IA3G-J1ST-AB/R4T-P - Filtered RJ45 PCB connectors

1664112

https://www.phoenixcontact.com/nl/products/1664112

Approvals

To download certificates, visit the product detail page: https://www.phoenixcontact.com/nl/products/1664112

cULus Recognized
Approval ID: E140403-20250401

Classifications

ECLASS

ECLASS-13.0	27460201
ECLASS-15.0	27460201

ETIM

ETIM 10.0	EC002637

UNSPSC

UNSPSC 21.0	39121400

Environmental product compliance

EU RoHS

Fulfills EU RoHS substance requirements	Yes, No exemptions

China RoHS

Environment friendly use period (EFUP)	EFUP-E
	No hazardous substances above the limits

EU REACH SVHC

REACH candidate substance (CAS No.)	No substance above 0.1 wt%

Phoenix Contact 2026 © - all rights reserved
https://www.phoenixcontact.com

PHOENIX CONTACT B.V.
Hengelder 56 6902 PA Zevenaar
Postbus 246 6900 AE Zevenaar
(0316) 59 17 20
sales@phoenixcontact.nl